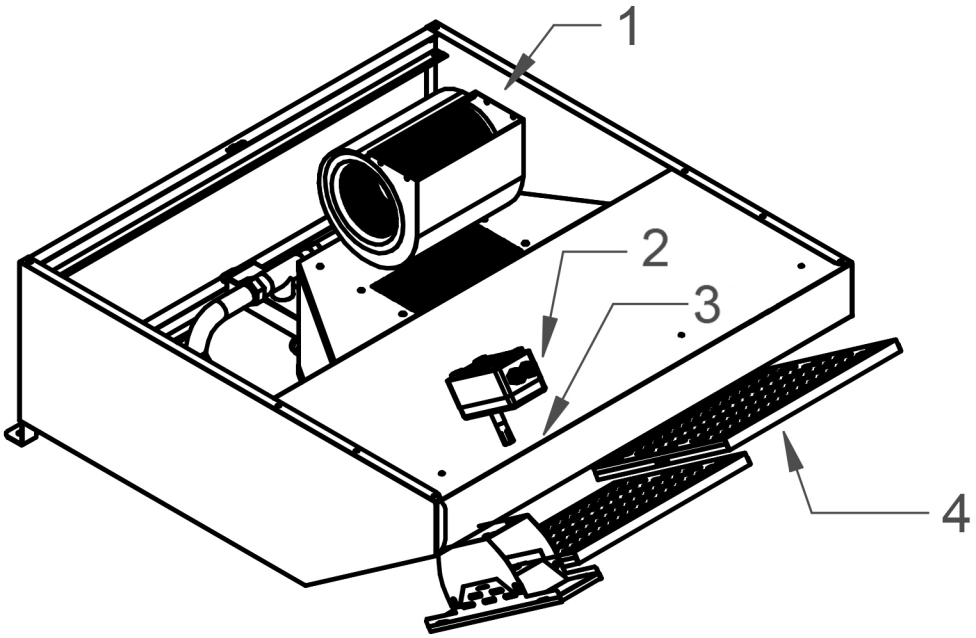

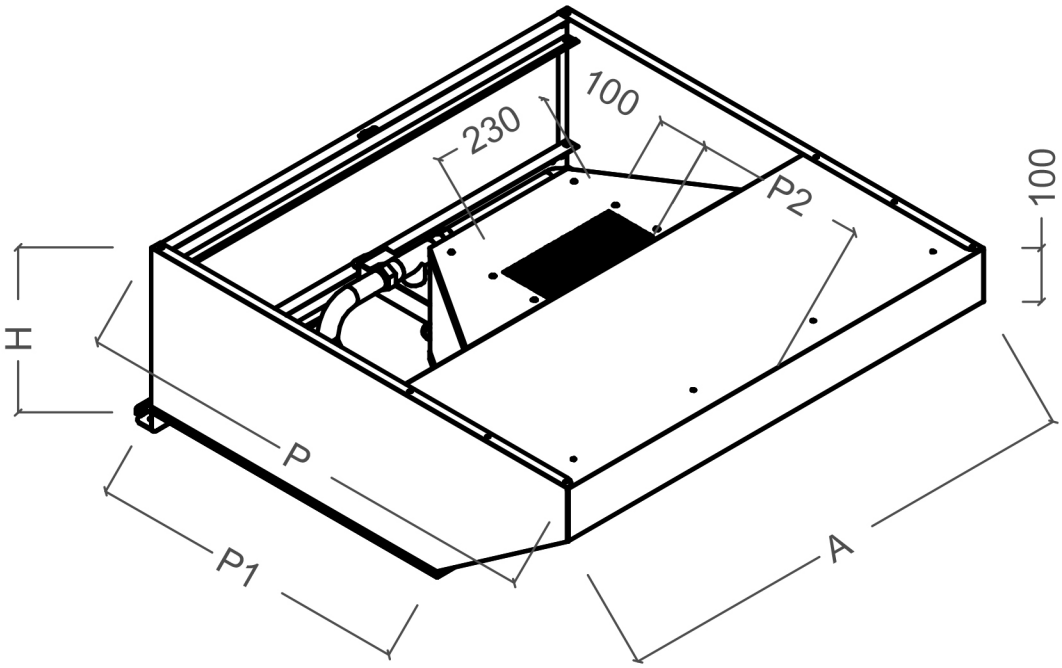

MODEL	A	P	H	P1	P2
116119	907	909	300	622	383

Pos.	Artikelbeschreibung	Description of item	Artikel Nr./Item No.
1	Lüfter, 230V, 50/60Hz	Fan, 230V, 50/60Hz	E051082
2	Lüftungsmotor Regler, automatik	Blower motor control, automatic	E06032078
3	Sensor-Regler	Sensor regulator	E06032088
4	Filter	Deflector filter	E06032162