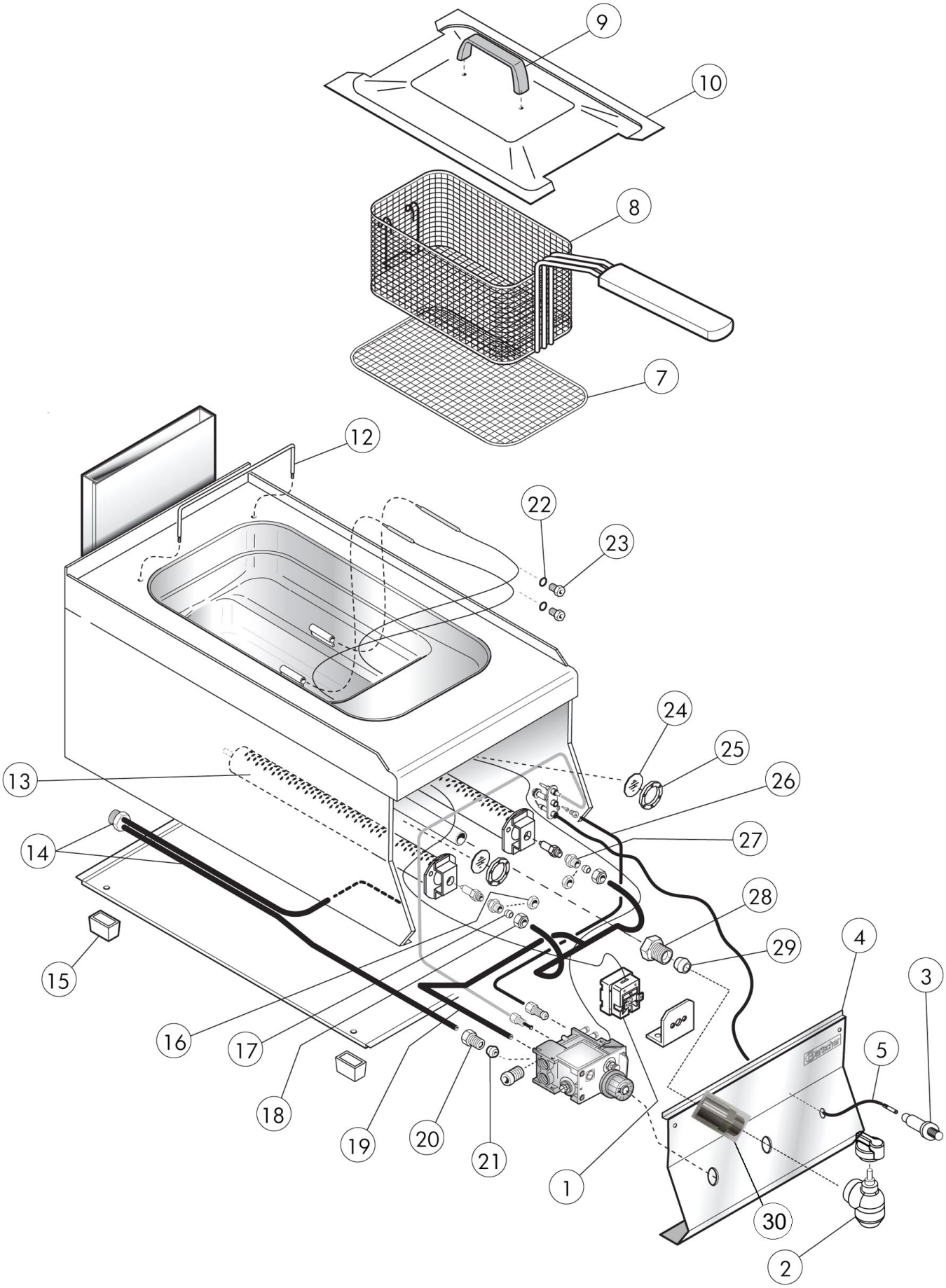


| | | | |
|---|---|---|---|
| Bartscher | Gas-Fritteuse 650, 8L, TG<br>Artikel-Nr.: 1152103 | Explosiosnzeichnung<br>29.01.2018 | Seite 1/4 |

| Pos. | Artikelbeschreibung | Description of item | Artikel Nr./Item No. |
|---|---|---|---|
| 1 | Sicherheitsthermostat | Safety thermostat | 0CM097701 |
| 2 | Ablasshahn | Drain cock | 0CR0846920 |
| 3 | Piezozünder | Piezo igniter | 01936100 |
| 4 | Blende | Panel | 08478001 |
| 5 | Zündkabel 160 mm | Ignition cable 160 mm | 0CR0508710 |
| 7 | Krümelsieb | Crumb sieve | 0CRO508560 |
| 8 | Ersatzkorb | Substitute basket | 158616 |
| 9 | Griff | Handle | 08222510 |
| 10 | Deckel o. Griff | Lid without handle | 0MA1044733812 |
| 12 | Korbaufhängung | Rod for hanging basket | 0CR0508540 |
| 13 | Brenner | Burner | 0CR0508410 |
| 14 | Gasleitung | Gas pipe | 0847940 |
| 15 | Fuß | Base | 01036021613 |
| 16 | Mutter 14 x 1 | Nut 14 x 1 | 01033700200 |
| 17 | Schneidring | Cutting ring | 086720 |
| 18 | Verschraubung M16 x 1,5 A19 | Screw connection M16 x 1,5 A19 | 01326500 |
| 19 | Hauptgasleitung | Main gas pipe | 0CR0849970 |
| 20 | Verschraubung | Screw connection | 0459300 |
| 21 | Schneidring | Cutting ring | 0417810 |
| 22 | Dichtring | Sealing ring | 0CM097900 |
| 23 | Schraube M10 x 1 | Screw M10 x 1 | 0CM012401 |
| 24 | Kontrollscheibe z. Brennerkontrolle | Control disc f. burner control | 01033600 |
| 25 | Rahmen z. Scheibe | Plate frame | n.m.lieferbar/n.m.available |
| 26 | Zündgasleitung | Gas ignition hose | 0CR0849980 |
| 27 | Düsenträger | Nozzle holder | 0CR0508630 |
| 28 | Schraube z. Ablasshahn | Screw f. drain cock | 0866000 |
| 29 | Schneidring 18 | Cutting ring | 0866200 |
| 30 | Verlängerung z. Ablasshahn | Extension f. drain cock | 0CR0846931 |

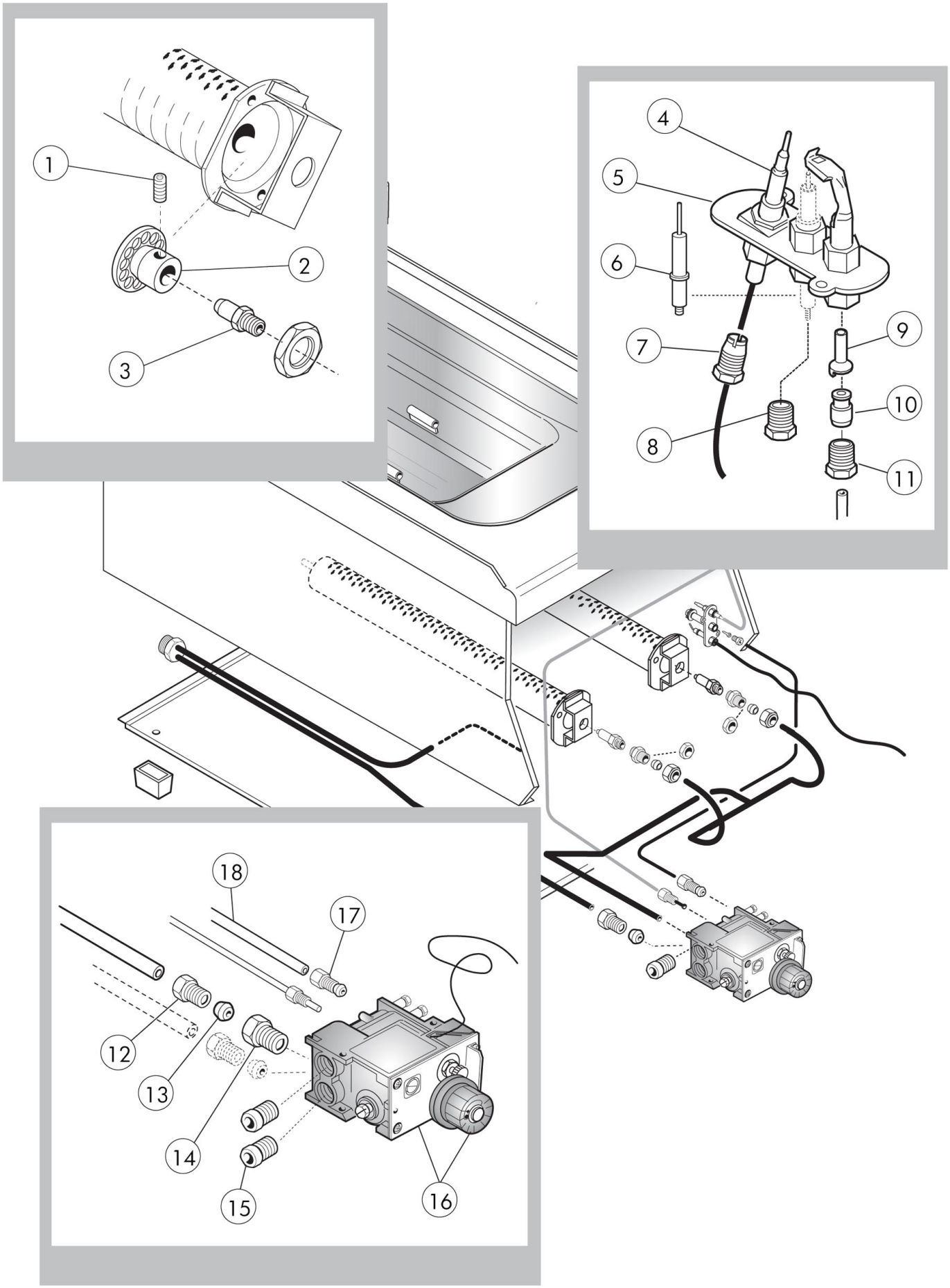
1
2
3
4
5
6
7
8
9
10
11
12
13
14
15
16
17
18

| Pos. | Artikelbeschreibung | Description of item | Artikel Nr./Item No. |
|---|---|---|---|
| 1 | Madenschraube | Locking screw | 0CM040400 |
| 2 | Lufthülse | Air regulation bush | 0CR0508400 |
| 3 | Düse, Propan, D 83, G 30, 50 mbar | Nozzle, propane, D 83, G 30, 50mbar | 0508730 |
| | Düse, D 95, G 30/28/37 | Nozzle, D 95, G 30/28/37 | 01491100 |
| | Düse, Erdgas H, D 145 | Nozzle, natural gas H, D 145 | 02902500 |
| | Düse, D 160, G 25, 20 mbar | Nozzle, D 160, G 25, 20 mbar | 01631200 |
| 4 | Thermoelement m. Kabel | Thermocouple w. cable | 049232 |
| 5 | Zündbrenner | Ignition burner | 0CM040800 |
| 6 | Zündkerze | Ignition plug | 01888300 |
| 7 | Verschraubung z. Thermoelement | Screw connection f. thermocouple | 020219 |
| 8 | Anschluss z. Zündkerze | Connection f. ignition plug | 054361 |
| 9 | Zünddüse, Propan, D 20, G30/50 | Ignition nozzle,propane,D 20,G30/50 | 01033719600 |
| | Zünddüse D 25 | Ignition nozzle D 25 | 01874700 |
| | Zünddüse, Erdgas, D 41 | Ignition nozzle, natural gas, D 41 | 01033719700 |
| 10 | Schneidring | Cutting ring | 0MA673600 |
| 11 | Verschraubung M10 x 1/4 | Screw connection M10 x 1/4 | 0673500 |
| 12 | Verschraubung | Screw connection | 0459300 |
| 13 | Schneidring | Cutting ring | 0417810 |
| 14 | Verschraubung | Screw connection | 0CR0508790 |
| 15 | Kegelventil z. Eurosit Armatur | Cone valve f. Eurosit Armature | 049638 |
| 16 | Armatur Eurosit | Armature Eurosit | 022163 |
| 17 | Verschraubung z. Gasleitung | Screw connection f. gas pipe | 0A011608 |
| 18 | Zündgasleitung | Ignition gas pipe | 0CR0849980 |