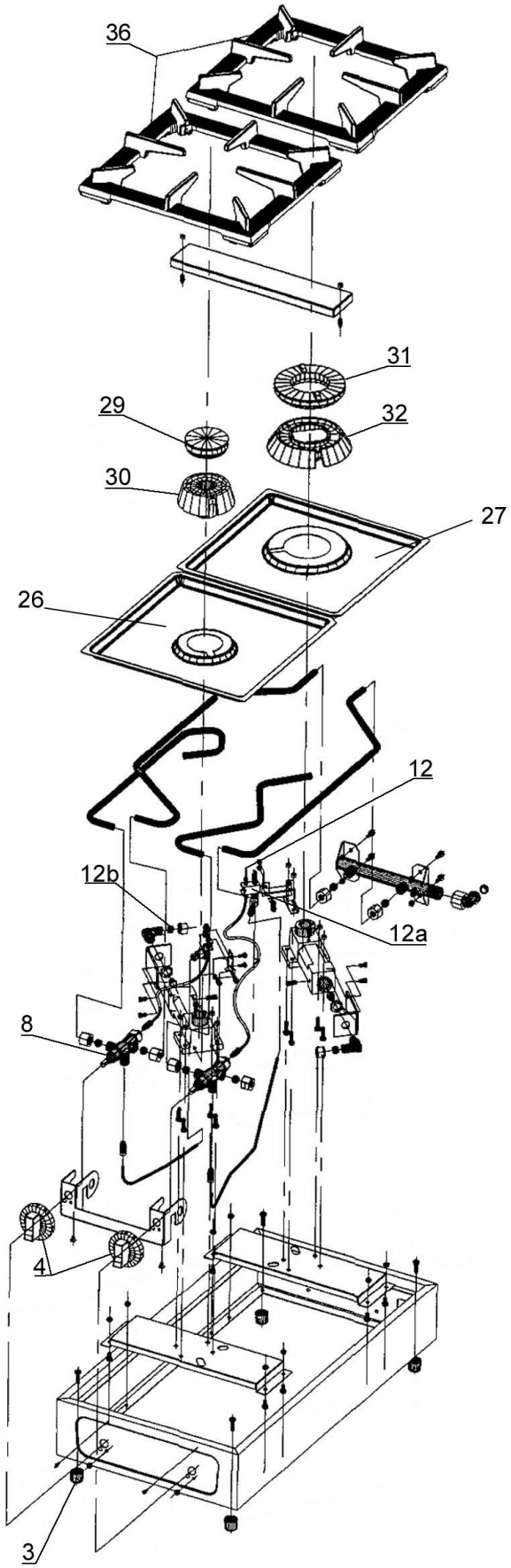


| | | | |
|---|---|---|---|
| Bartscher | Gaskocher 2K1100-H<br>Artikel-Nr.: 1057503 | Explosionszeichnung<br>16.03.2015 | Seite 1/2 |

| Pos. | Artikelbeschreibung | Description of item | Artikel Nr./Item No. |
|---|---|---|---|
| 3 | Fuß | Base | E0MPIEBIG |
| 4 | Knebel z. Gaskocher | Knob f. gas cooker | n.m.lieferbar/n.m.available |
| | Knebel, silber | Knob, silver | n.m.lieferbar/n.m.available |
| | Ring, schwarz f. E0MMA60MET | Ring, black f. E0MMA60MET | n.m.lieferbar/n.m.available |
| | Knebel, aktuelles Modell ersetzt alle o.g. Modelle | Knob, actual model, replacement part, for all above mentioned models | E0MMA60GF |
| 8 | Gashahn | Gas cock | 0RU700S |
| 12 | Thermoelement 800 mm | Thermocouple 800 mm | 01916000 |
| 12a | Zündbrenner m. Allgasdüse | Ignition burner w. nozzle | 010912 |
| 12b | Düse, Propan, D 110, 50 mbar | Nozzle, propane D 110, 50 mbar | 061405 |
| | Düse, Propan, D 90, 50 mbar | Nozzle, propane, D 90, 50 mbar | 061406 |
| | Düse, Erdgas D 180R, 20 mbar | Nozzle, nat. gas D 180R, 20 mbar | E0MIN180R |
| | Düse, Erdgas D 150, 20 mbar | Nozzle, nat. gas D 150, 20 mbar | E0MIN150 |
| | Düse, Propangas D125, 30 mbar | Nozzle, prop. gas D125, 30 mbar | E0MIN125 |
| | Düse, Propangas D105, 30 mbar | Nozzle, prop. gas D105, 30 mbar | E0MIN105 |
| 26 | Fettauffangschale | Grease drip pan | E0105750326 |
| 27 | Fettauffangschale | Grease drip pan | E0105750327 |
| 29 | Brennerdeckel 4,5 kW | Burner cap 4,5 kW | E0SPAR65 |
| 30 | Brennertulpe 4,5 kW | Burner body 4,5 kW | E0BRUR |
| 31 | Brennerdeckel 6,5 kW | Burner cap 6,5 kW | E0SPA65DC |
| 32 | Brennertulpe 6,5 kW | Burner body 6,5 kW | E0BRUDC |
| 36 | Rostaufsatz | Grid attachment | 051050 |
| o.Abb./ no pic. | Niederdruckregler Typ EN61-DS | Low-pressure controller type EN61-DS | 00115000 |
| | Schlauchbruchsicherung, 50 mbar | Hose failure safety device, 50 mbar | 00285000 |
| | Winkel einschraubbar | Angle bracket screwable | 007051 |
| | Schlauchverbinder, G1/4, LH | Hose connector, G1/4, left-hand th. | 14040 |
| | Schlauchleitung, Mitteldruck | Hose line, medium pressure | 0445530 |